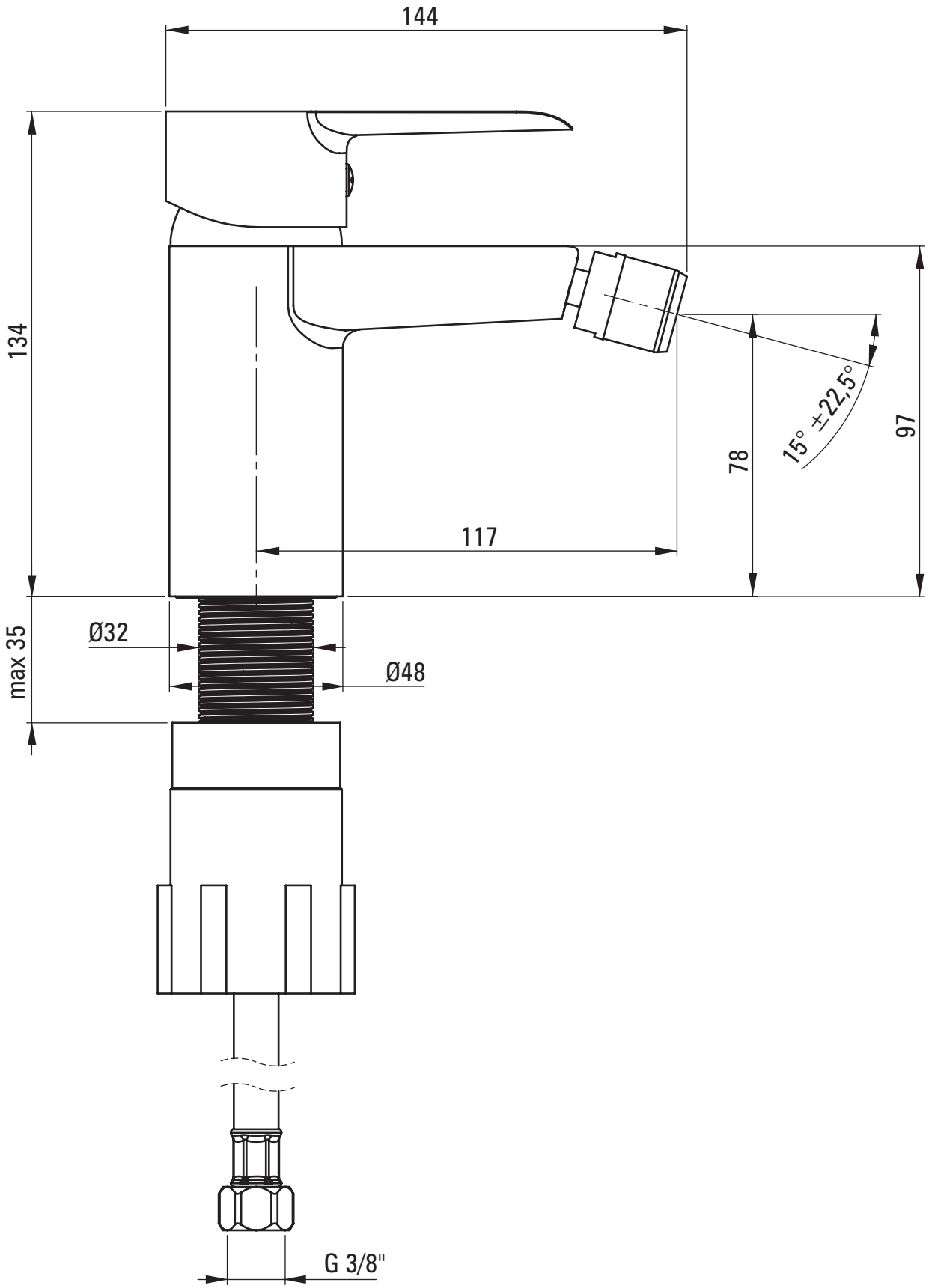
144
134
78
97
15° ±22,5°
117
max 35
Ø32
Ø48
G 3/8"